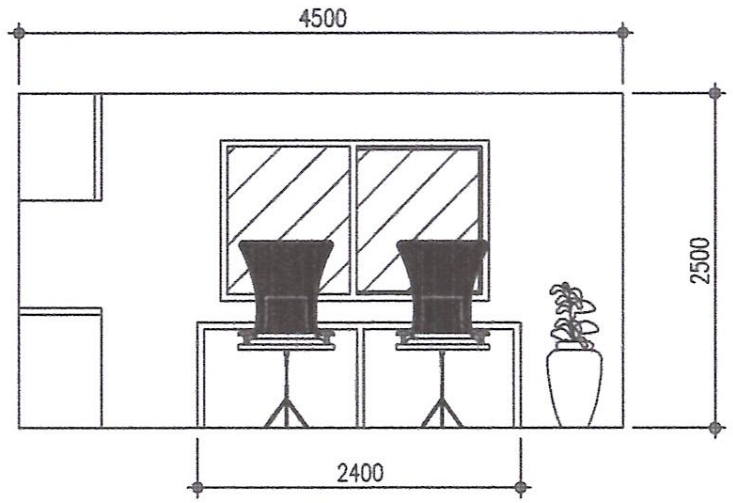

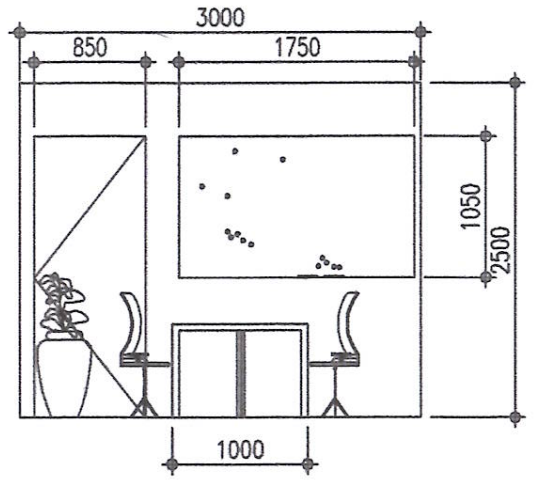

DECORATIVE WALL

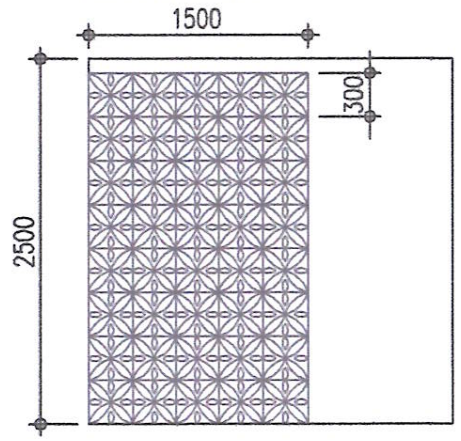

OFFICE CABINET

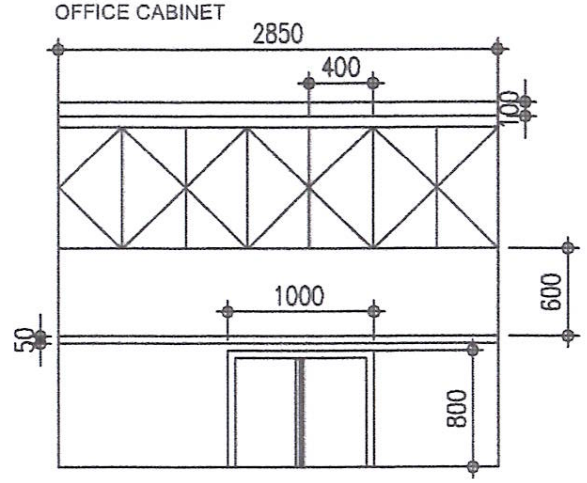

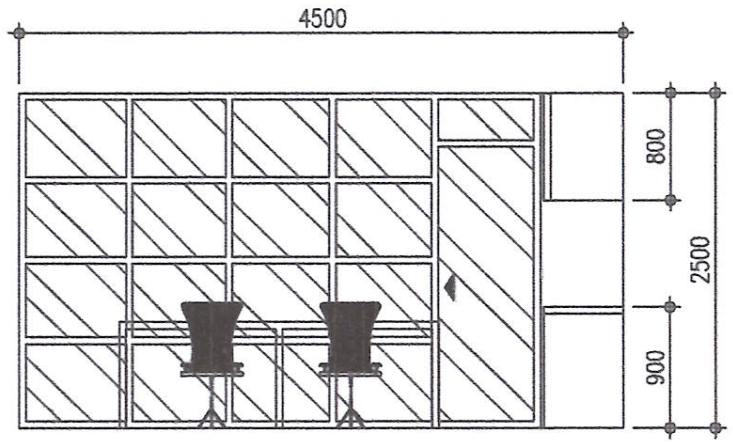

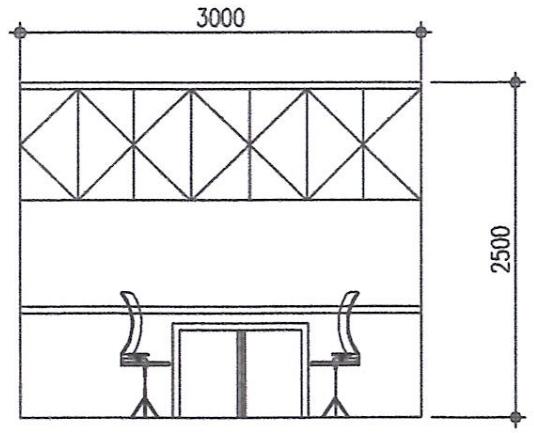

1 A-5 **SECTION**
SCALE NTS.

DISPLAY SHELVES

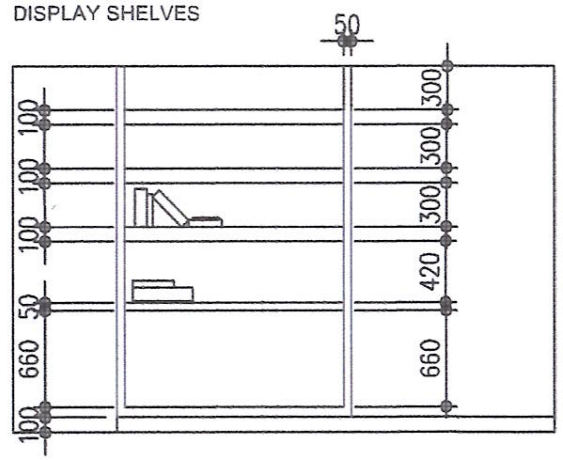

PANTRY

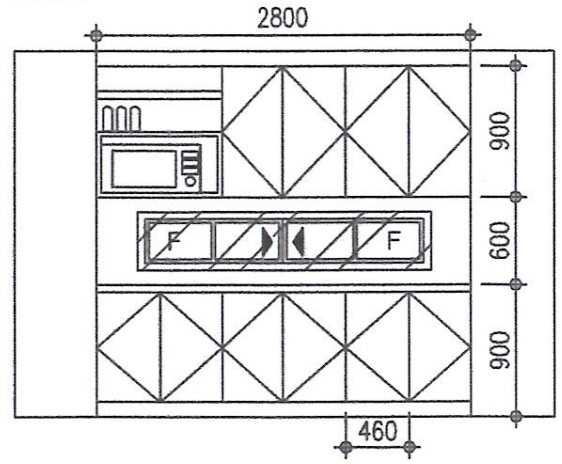

2 A-5 **SECTION**
SCALE NTS.

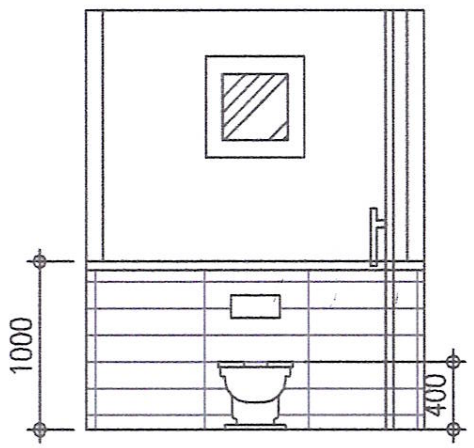

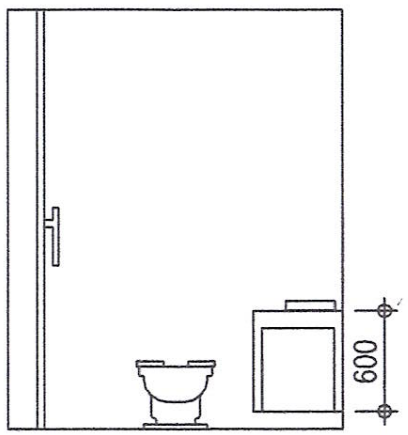

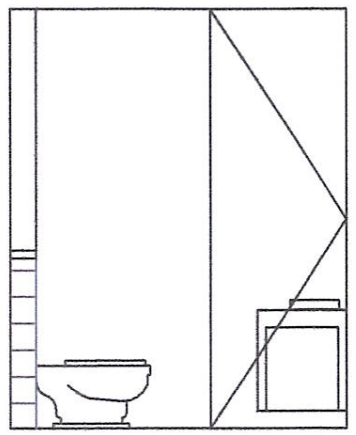

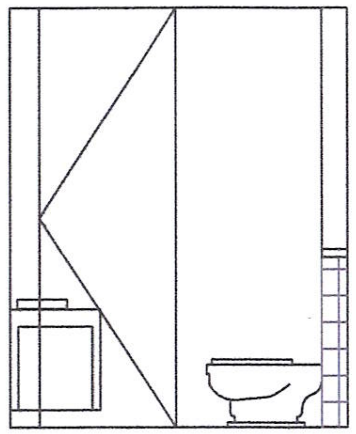

3 A-5 **BLOW-UP PLAN**
SCALE NTS.

BATAAN PENINSULA STATE UNIVERSITY
TECHNICAL WORKING GROUP FOR INFRASTRUCTURE
CAPITOL COMPOUND, BRGY. TENEJERO, CITY OF BALANGA, BATAAN,
E-MAIL: bpsu.twgfm2018@gmail.com/ bpsuppo2017@gmail.com
TELEPHONE NO.: (047) 237-16-98

NOTE: WRITTEN DIMENSIONS ON THESE DRAWINGS SHALL HAVE PRECEDENCE OVER SCALED DIMENSIONS. CONTRACTORS SHALL VERIFY AND BE RESPONSIBLE FOR ALL DIMENSIONS AND CONDITIONS ON THE JOB. THE ARCHITECT MUST BE NOTIFIED IMMEDIATELY OF ANY VARIANCE FROM THE DIMENSIONS AND CONDITIONS SHOWN BY THESE DRAWINGS.

NOTE: DISCREPANCY ON ALL DRAWINGS & SPECIFICATIONS (ARCHITECTURAL, STRUCTURAL, SANITARY, ELECTRICAL, MECHANICAL, ETC.) SHALL BE VERIFIED FOR VERIFICATION

NOTE: IF IN DOUBT, ASK! DO NOT SCALE

PROJECT TITLE:

REFURBISHMENT OF CHEMISTRY LECTURE ROOM AT BPSU MAIN CAMPUS

LOCATION:
BATAAN PENINSULA STATE UNIVERSITY (MAIN CAMPUS)
CAPITOL COMPOUND, CITY OF BALANGA, BATAAN

STRUCTURAL ENGINEER
REG. NO.:
PTR. NO.:
PLACE:
TIN NO.:

MASTER PLUMBER/SANITARY ENGINEER
REG. NO.:
PTR. NO.:
PLACE:
TIN NO.:

PROFESSIONAL ELECTRICAL ENGINEER
REG. NO.:
PTR. NO.:
PLACE:
TIN NO.:

PROFESSIONAL MECHANICAL ENGINEER
REG. NO.:
PTR. NO.:
PLACE:
TIN NO.:

REVISION

NO.	DESCRIPTION	DATE

PREPARED BY:
AR. SHARON R. BAUTISTA
ARCHITECT

REVIEWED BY:
ENGR. ROY JOSEPH D. RODRIQUEZ
DIRECTOR OF PPDO

RECEIVED BY:
PROF. JOERALD M. GADIA
VICE PRESIDENT ADMIN & FINANCE

APPROVED BY:
DR. RUBY B. SANTOS-MATIBAG
UNIVERSITY PRESIDENT

REPUBLIC ACT 9266.

NOTE: THIS DRAWING, AS AN INSTRUMENT OF SERVICE IS THE PROPERTY OF: BATAAN PENINSULA STATE UNIVERSITY AND AS SUCH MUST NOT BE REPRODUCED OR COPIED IN PART OR IN WHOLE WITHOUT THEIR PERMISSION ALL DRAWINGS ARE TO BE RETURNED WHEN NO LONGER IN USE.

SHEET CONTENT
- SECTION PLAN
- BLOW UP SECTION PLAN
- CABINET BLOW UP

SHEET NUMBER
A5

ENGR. DAN WILLIAM C. MARTINEZ
PROJECT LEADER, SIKAT TBI